ESKA

ENSEMBLE MEUBLE DE SALLE DE BAIN SUSPENDU

WALL-HUNG BATHROOM FURNITURE SET

PBA012T-FUR

Dimensions en mm
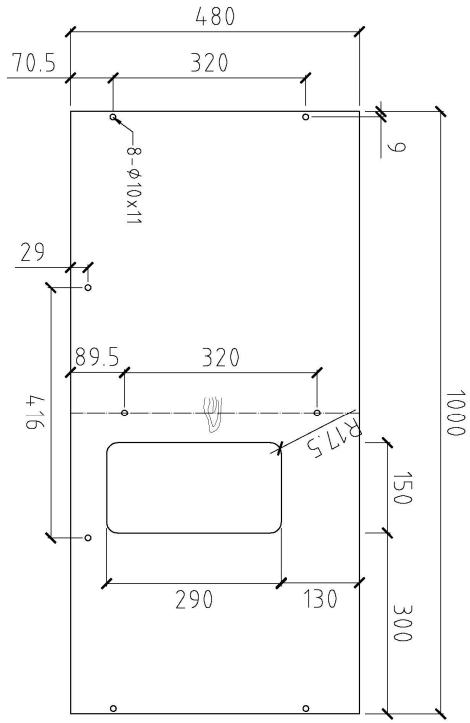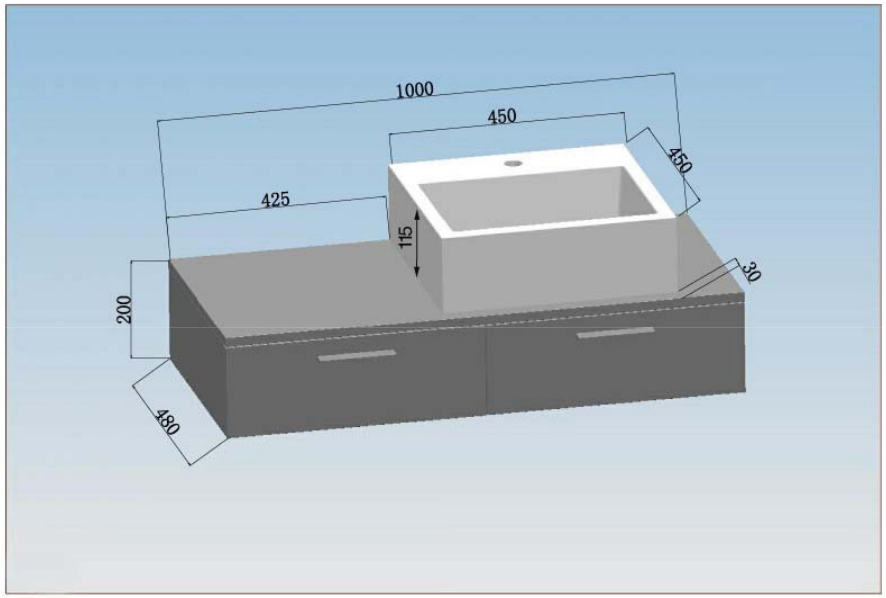
Dimensions in mm